Centre No.						Paper Reference							Surname	Initial(s)
Candidate No.						6	6	8	0	/	0	1 R	Signature	

Paper Reference(s)

6680/01R

Edexcel GCE

Mechanics M4

Advanced/Advanced Subsidiary

Monday 16 June 2014 – Morning

Time: 1 hour 30 minutes

Examiner's use only

Team Leader's use only

Question Number	Leave Blank
1	
2	
3	
4	
5	
6	
Total	

Materials required for examination
Mathematical Formulae (Pink)

Items included with question papers
Nil

Candidates may use any calculator allowed by the regulations of the Joint Council for Qualifications. Calculators must not have the facility for symbolic algebra manipulation or symbolic differentation/integration, or have retrievable mathematical formulae stored in them.

Instructions to Candidates

In the boxes above, write your centre number, candidate number, your surname, initials and signature.
Check that you have the correct question paper.
Answer ALL the questions.
You must write your answer to each question in the space following the question.
Whenever a numerical value of g is required, take $g = 9.8$ m s^{-2} and give your answer to either two significant figures or three significant figures.
When a calculator is used, the answer should be given to an appropriate degree of accuracy.

Information for Candidates

A booklet 'Mathematical Formulae and Statistical Tables' is provided.
Full marks may be obtained for answers to ALL questions.
The marks for individual questions and the parts of questions are shown in round brackets: e.g. **(2)**.
There are 6 questions in this question paper. The total mark for this paper is 75.
There are 24 pages in this question paper. Any blank pages are indicated.

Advice to Candidates

You must ensure that your answers to parts of questions are clearly labelled.
You should show sufficient working to make your methods clear to the Examiner.
Answers without working may not gain full credit.

This publication may be reproduced only in accordance with Pearson Education Ltd copyright policy.
©2014 Pearson Education Ltd.

Printer's Log. No.
P43160A
W850/R6679/57570 5/5/5/5/1/

P 4 3 1 6 0 A 0 1 2 4

Turn over

PEARSON

Leave blank

1. A small smooth ball of mass m is falling vertically when it strikes a fixed smooth plane which is inclined to the horizontal at an angle α, where $0° < \alpha < 45°$. Immediately before striking the plane the ball has speed u. Immediately after striking the plane the ball moves in a direction which makes an angle of 45° with the plane. The coefficient of restitution between the ball and the plane is e. Find, in terms of m, u and e, the magnitude of the impulse of the plane on the ball.

(11)

Leave blank

2. A ship A is travelling at a constant speed of 30 km h^{-1} on a bearing of 050°. Another ship B is travelling at a constant speed of v km h^{-1} and sets a course to intercept A. At 1400 hours B is 20 km from A and the bearing of A from B is 290°.

(a) Find the least possible value of v.

(3)

Given that $v = 32$,

(b) find the time at which B intercepts A.

(8)

Leave blank

Question 2 continued

Leave blank

3. A small ball of mass m is projected vertically upwards from a point O with speed U. The ball is subject to air resistance of magnitude mkv, where v is the speed of the ball and k is a positive constant.

Find, in terms of U, g and k, the maximum height above O reached by the ball.

(8)

Leave blank

4. A smooth uniform sphere S is moving on a smooth horizontal plane when it collides obliquely with an identical sphere T which is at rest on the plane. Immediately before the collision S is moving with speed U in a direction which makes an angle of 60° with the line joining the centres of the spheres. The coefficient of restitution between the spheres is e.

(a) Find, in terms of e and U where necessary,

(i) the speed and direction of motion of S immediately after the collision,

(ii) the speed and direction of motion of T immediately after the collision.

(12)

The angle through which the direction of motion of S is deflected is $\delta°$.

(b) Find

(i) the value of e for which δ takes the largest possible value,

(ii) the value of δ in this case.

(3)

Leave blank

Question 4 continued

Leave blank

5.

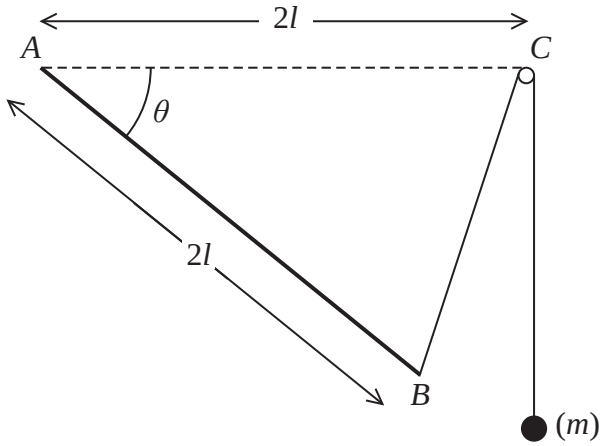

Figure 1

A uniform rod AB, of length $2l$ and mass $12m$, has its end A smoothly hinged to a fixed point. One end of a light inextensible string is attached to the other end B of the rod. The string passes over a small smooth pulley which is fixed at the point C, where AC is horizontal and $AC = 2l$. A particle of mass m is attached to the other end of the string and the particle hangs vertically below C.

The angle BAC is θ, where $0 < \theta < \frac{\pi}{2}$, as shown in Figure 1.

(a) Show that the potential energy of the system is

$$4mgl\left(\sin\frac{\theta}{2} - 3\sin\theta\right) + \text{constant}$$

(4)

(b) Find the value of θ when the system is in equilibrium and determine the stability of this equilibrium position.

(10)

P 4 3 1 6 0 A 0 1 6 2 4

Leave blank

Question 5 continued

Leave blank

6.

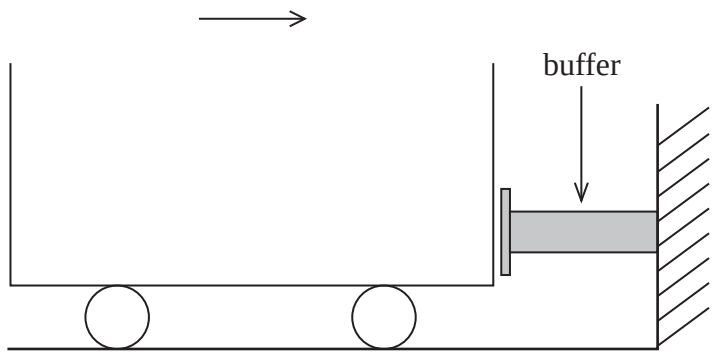

Figure 2

A railway truck of mass M approaches the end of a straight horizontal track and strikes a buffer. The buffer is parallel to the track, as shown in Figure 2. The buffer is modelled as a light horizontal spring PQ, which is fixed at the end P. The spring has a natural length a and modulus of elasticity Mn^2a, where n is a postive constant. At time $t = 0$, the spring has length a and the truck strikes the end Q with speed U. A resistive force whose magnitude is Mkv, where v is the speed of the truck at time t, and k is a positive constant, also opposes the motion of the truck. At time t, the truck is in contact with the buffer and the compression of the buffer is x.

(a) Show that, while the truck is compressing the buffer

$$\frac{d^2x}{dt^2} + k\frac{dx}{dt} + n^2x = 0$$

(4)

It is given that $k = \frac{5n}{2}$

(b) Find x in terms of U, n and t.

(7)

(c) Find, in terms of U and n, the greatest value of x.

(5)

Leave blank

Question 6 continued

Q6

(Total 16 marks)

TOTAL FOR PAPER: 75 MARKS

END