Write your name here

Surname	Other names

Pearson Edexcel
International Advanced Level

Centre Number | Candidate Number

Mechanics M3

Advanced/Advanced Subsidiary

Monday 27 January 2014 – Morning
Time: 1 hour 30 minutes

Paper Reference
WME03/01

You must have:
Mathematical Formulae and Statistical Tables (Blue)

Total Marks

Candidates may use any calculator allowed by the regulations of the Joint Council for Qualifications. Calculators must not have the facility for symbolic algebra manipulation, differentiation and integration, or have retrievable mathematical formulae stored in them.

Instructions

- Use **black** ink or ball-point pen.
- If pencil is used for diagrams/sketches/graphs it must be dark (HB or B). Coloured pencils and highlighter pens must not be used.
- **Fill in the boxes** at the top of this page with your name, centre number and candidate number.
- Answer **all** questions and ensure that your answers to parts of questions are clearly labelled.
- Answer the questions in the spaces provided – *there may be more space than you need.*
- You should show sufficient working to make your methods clear. Answers without working may not gain full credit.
- Whenever a numerical value of g is required, take $g = 9.8$ m s^{-2}, and give your answer to either two significant figures or three significant figures.
- When a calculator is used, the answer should be given to an appropriate degree of accuracy.

Information

- The total mark for this paper is 75.
- The marks for **each** question are shown in brackets – *use this as a guide as to how much time to spend on each question.*

Advice

- Read each question carefully before you start to answer it.
- Try to answer every question.
- Check your answers if you have time at the end.

Turn over

©2014 Pearson Education Ltd.
5/5/5/5/1/

P 4 3 1 3 9 A 0 1 2 8

PEARSON

Leave blank

1. A particle P of mass 0.5 kg moves along the positive x-axis under the action of a single force of magnitude F newtons. The force acts along the x-axis in the direction of x increasing. When P is x metres from the origin O, it is moving away from O with speed $\sqrt{\left(8x^{\frac{3}{2}} - 4\right)}\,\mathrm{m\,s^{-1}}$.

Find F when P is 4 m from O.

(5)

P 4 3 1 3 9 A 0 2 2 8

Leave blank

2. A particle P of mass m is attached to one end of a light elastic spring, of natural length l and modulus of elasticity $2mg$. The other end of the spring is attached to a fixed point A on a rough horizontal plane. The particle is held at rest on the plane at a point B, where $AB = \frac{1}{2}l$, and released from rest. The coefficient of friction between P and the plane is $\frac{1}{4}$

Find the distance of P from B when P first comes to rest.

(9)

Leave blank

3. A light rod AB of length $2a$ has a particle P of mass m attached to B. The rod is rotating in a vertical plane about a fixed smooth horizontal axis through A. Given that the greatest tension in the rod is $\frac{9mg}{8}$, find, to the nearest degree, the angle between the rod and the downward vertical when the speed of P is $\sqrt{\left(\frac{ag}{20}\right)}$.

(8)

Leave blank

4.

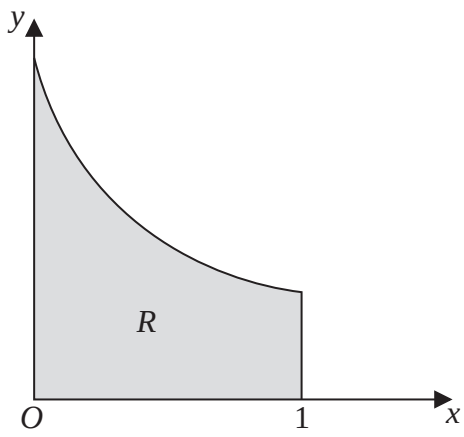

Figure 1

Figure 1 shows a sketch of the region R bounded by the curve with equation $y = e^{-x}$, the line $x = 1$, the x-axis and the y-axis. A uniform solid S is formed by rotating R through 2π radians about the x-axis.

(a) Show that the volume of S is $\frac{\pi}{2}(1 - e^{-2})$.

(3)

(b) Find, in terms of e, the distance of the centre of mass of S from O.

(7)

P 4 3 1 3 9 A 0 1 0 2 8

Leave blank

Question 4 continued

Leave blank

5. A solid S consists of a uniform solid hemisphere of radius r and a uniform solid circular cylinder of radius r and height $3r$. The circular face of the hemisphere is joined to one of the circular faces of the cylinder, so that the centres of the two faces coincide. The other circular face of the cylinder has centre O. The mass per unit volume of the hemisphere is $3k$ and the mass per unit volume of the cylinder is k.

(a) Show that the distance of the centre of mass of S from O is $\frac{9r}{4}$

(5)

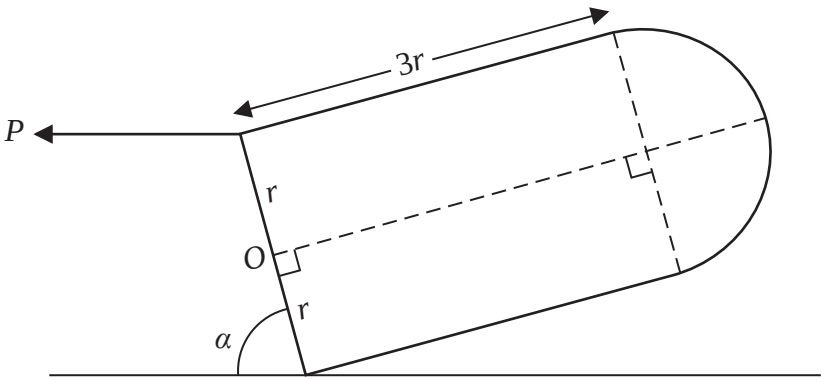

Figure 2

The solid S is held in equilibrium by a horizontal force of magnitude P. The circular face of S has one point in contact with a fixed rough horizontal plane and is inclined at an angle α to the horizontal. The force acts through the highest point of the circular face of S and in the vertical plane through the axis of the cylinder, as shown in Figure 2. The coefficient of friction between S and the plane is μ. Given that S is on the point of slipping along the plane in the same direction as P,

(b) show that $\mu = \frac{1}{8}(9 - 4\cot\alpha)$.

(7)

P 4 3 1 3 9 A 0 1 4 2 8

Leave blank

Question 5 continued

Leave blank

6.

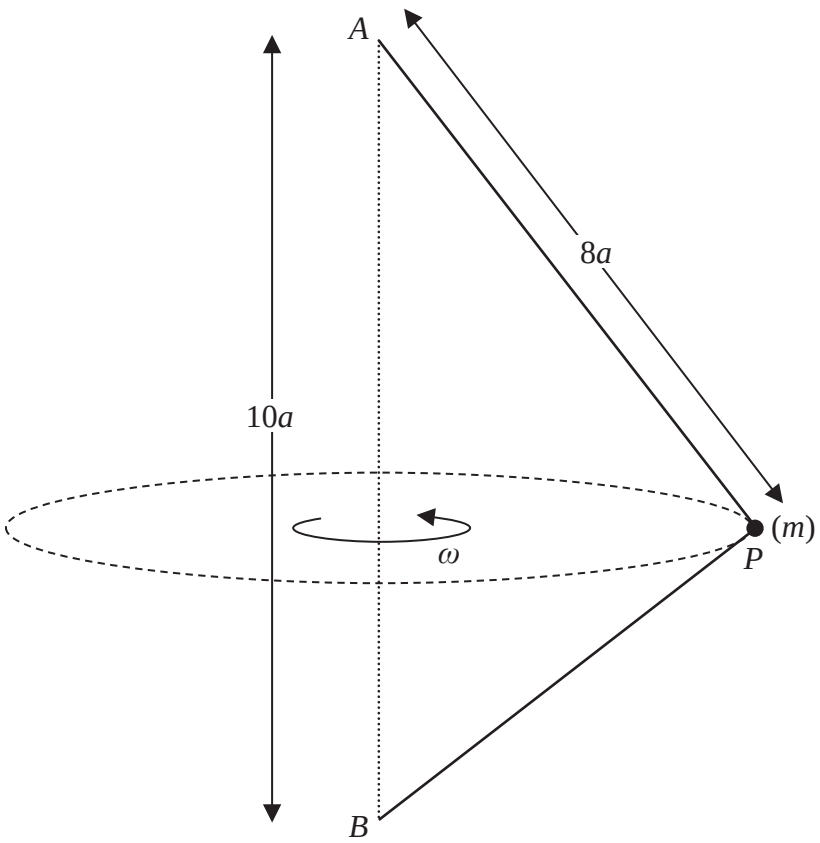

Figure 3

A light inextensible string of length $14a$ has its ends attached to two fixed points A and B, where A is vertically above B and $AB = 10a$. A particle of mass m is attached to the string at the point P, where $AP = 8a$. The particle moves in a horizontal circle with constant angular speed ω and with both parts of the string taut, as shown in Figure 3.

(a) Show that angle $APB = 90°$.

(2)

(b) Show that the time for the particle to make one complete revolution is less than $2\pi\sqrt{\left(\frac{32a}{5g}\right)}$.

(13)

P 4 3 1 3 9 A 0 1 8 2 8

Leave blank

Question 6 continued

Leave blank

7.

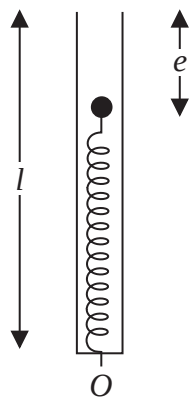

Figure 4

A smooth hollow narrow tube of length l has one open end and one closed end. The tube is fixed in a vertical position with the closed end at the bottom. A light elastic spring has natural length l and modulus of elasticity $8mg$. The spring is inside the tube and has one end attached to a fixed point O on the closed end of the tube. The other end of the spring is attached to a particle P of mass m. The particle rests in equilibrium at a distance e below the top of the tube, as shown in Figure 4.

(a) Find e in terms of l.

(2)

The particle P is now held inside the tube at a distance $\frac{1}{2}l$ below the top of the tube and released from rest at time $t = 0$

(b) Prove that P moves with simple harmonic motion of period $2\pi\sqrt{\left(\frac{l}{8g}\right)}$.

(6)

The particle P passes through the open top of the tube with speed u.

(c) Find u in terms of g and l.

(4)

(d) Find the time taken for P to first attain a speed of $\sqrt{\left(\frac{9gl}{32}\right)}$.

(4)

P 4 3 1 3 9 A 0 2 2 2 8

Leave blank

Question 7 continued

Leave blank

Question 7 continued

Q7

(Total 16 marks)

TOTAL FOR PAPER: 75 MARKS

END

P 4 3 1 3 9 A 0 2 8 2 8